PRODUCT SHEET

Description:
Glass Clamp "Square" 45x47x27mm, SS304-SSS, ø33,7mm Tube, 6-10,76mm Glass Thickness,No Safety Pin & No Cushions, (Cushion Model D) Max Load Capacity Pr.Pcs: 25Kg

Item number:
22.10.601-9

Units	Box	Carton	HS Code	Barcode
Pcs.	4	40	8302419000	5704866476164

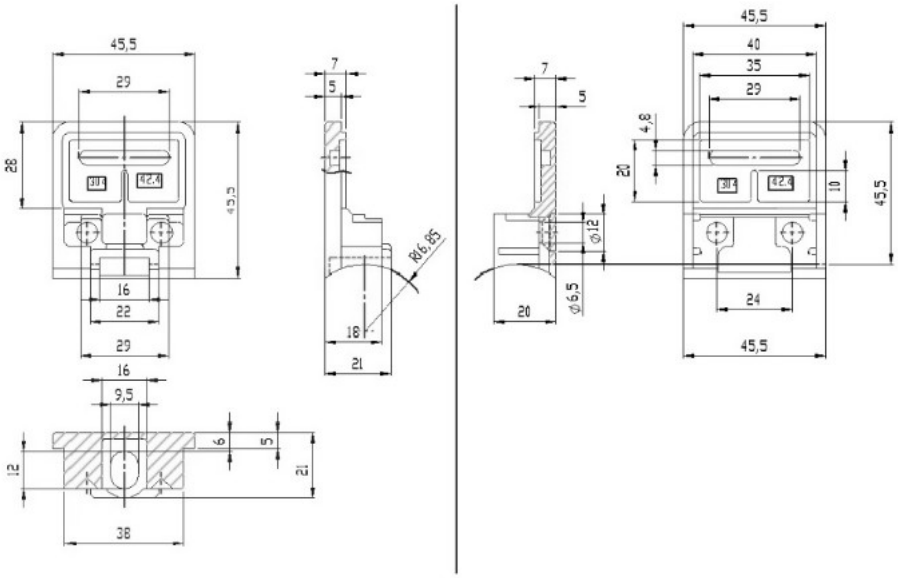

SISO A/S
Mileparken 11
DK-2740 Skovlunde
Denmark
VAT: DK 24786013

Phone +45 45 830 900

www.siso.dk
siso@siso.dk

Danske Bank
Nytorv Branch
Copenhagen
SWIFT: DABADKKK

Account no.
4180 3112 112936
IBAN Account
DK7230003112112936